Government of Saskatchewan

Saskatchewan Pipelines Code

Directive PNG034

January 2020

Revision 1.0

Governing Legislation:

Act: *The Pipelines Act, 1998*

Regulation: *The Pipelines Administration and Licensing Regulations*

Order:

Record of Change

Revision	Date	Description
0.0		Initial draft
1.0	January 20, 2020	Approved first version

Contents

Chapter 1: Introduction 4
1.1 Purpose 4
1.2 Governing Legislation 4
1.3 Application and Interpretation 4
1.4 Pipeline and Flowline Determination 5
1.5 Other Regulatory Requirements 6
1.6 Definitions 7
Chapter 2: Technical Standards and Requirements 10
2.1 Technical Standards 10
2.2 Exemption from Standard 10
2.3 Approval of Non-standard Materials or Methods 10
2.4 Pipeline Design 10
2.5 Pressure Testing 10
2.5.1 Pressure Testing Required 10
2.5.2 Notice of Pressure Test 11
2.5.3 Minimum Test Pressure 11
2.5.4 Pressure and Temperature Recording Requirements 11
2.6 Operating Pressure 12
2.6.1 Maximum Operating Pressure 12
2.6.2 Overpressure Protection 12
2.6.3 Overpressure Protection for Flowlines Connected to Artificial Lift Systems 12
Chapter 3: Ground Disturbance, Incidents and other Requirements 13
3.1 Pipeline to be Located 13
3.2 Incidents 13
3.3 Construction Notification 13
3.4 Local Spill Response Units 13
3.5 Pipeline Integrity 13
Chapter 4: Watercourse and Watercourse Crossing 14
4.1 Large Permanent Watercourses 14
4.2 Small Permanent Watercourses 14
4.3 Additional Information for Permanent Watercourses 15

4.4 Non-standard Watercourse Crossing Applications 15
4.5 Description of Documents 15
Chapter 5: Application Requirements 17
5.1 Licence Expiry 17
5.2 Application for Approval Required 17
5.3 Reporting Required 17
5.4 Survey Plan 18
5.5 Pipeline Spatial Data 18
5.6 As-Built Survey and Spatial Data 18
5.7 Required Data for Licence Application 19
Chapter 6: Legacy Licence 20
6.1 Legacy Licence 20
Chapter 7: Retroactive Licence 21
7.1 Retroactive Licence Required 21
7.2 Information Required for a Retroactive Licence 21
7.2.1 Flowlines 21
7.2.2 Pipelines other than Flowlines 22
7.3 Spatial Data for a Designated Pipeline 23
7.4 Survey Plan for a Designated Pipeline 23
Appendix 1: Spatial Data (Shapefiles) Submission Requirements 24
Appendix 2: Pipeline Survey Requirements 27
Appendix 3: Applicable Legislation and Design Requirements for Pipeline and Pressure Equipment 28
Appendix 4: Temporary Pipeline 41

Chapter 1: Introduction

1.1 Purpose

This Directive sets out the Ministry of Energy and Resources (ER)'s technical requirements for the design, construction, operation, modification, discontinuation and abandonment of pipelines.

This Directive also contains application requirements for:

- pipeline applications submitted on and after January 20, 2020;
- applications for registering a legacy licence; and
- applications for retroactive licensing of designated pipelines, including flowlines.

Questions on this Directive can be directed to the ER Service Desk at 1-855-219-9373 or ER.servicedesk@gov.sk.ca.

1.2 Governing Legislation

The requirements outlined in this Directive are based on *The Pipelines Act, 1998* (PA).

This Directive also references the following:

- *American Society of Mechanical Professional Engineers B31.3: Process Piping Code (ASME B31.3);*
- *The Boiler and Pressure Vessels Act. 1999 (BPVA);*
- *The Boiler and Pressure Vessel Regulations, 2017 (BPVR);*
- *Canadian Standards Association Standard B51: Boiler, Pressure Vessel, and Pressure Piping Code (CSA B51);*
- *Canadian Standards Association Standard Z662, Oil and Gas Pipeline Systems (CSA Z662);*
- *Directive S-01: Saskatchewan Upstream Petroleum Industry Storage Standards (Directive S-01);*
- *Directive S-20: Saskatchewan Upstream Flaring and Incineration Requirements (Directive S-20);*
- *Directive PNG001: Facility Licence Requirements;*
- *Directive PNG017: Measurement Requirements for Oil and Gas Operations;*
- *Directive PNG014: Incident Reporting Requirements (Directive PNG014); and*
- *The Pipelines Administration and Licensing Regulations (PALR).*

1.3 Application and Interpretation

This Directive applies to all pipelines that are subject to the jurisdiction of the PA. Appendix 3 and 4 of this Directive provide interpretations of technical requirements for pipelines that are exempt from licensing. Please refer to subsection 3(2) of the PA and Part 4 of PALR for pipelines that are exempt from licensing.

This Directive sets out standards for the design and construction of pipelines. If a lesser standard was permitted at the time of issuing a legacy licence or at the time of constructing a designated pipeline, that lesser standard is acceptable.

1.4 Pipeline and Flowline Determination

Pipeline, as defined in the PA,

(i) means a pipe or system of pipes for the transportation of:

(A) liquid hydrocarbons, including crude oil, multiphase fluids containing hydrocarbons, oil and water emulsions, condensate, liquid petroleum products, natural gas liquids and liquefied petroleum gas;

(B) gaseous hydrocarbons, including natural gas, manufactured gas and synthetic gas;

(C) water, steam or any other substance where the water, steam or other substance is incidental to or used in the production of crude oil or natural gas; or

(D) carbon dioxide; and

(ii) includes any of the following that are incidental to or used in connection with the pipeline:

(A) tanks, tank batteries, pumps, compressors and racks;

(B) storage facilities, loading facilities, terminal facilities and other similar facilities.

Flowline, as defined in the PA, means a pipeline connecting a wellhead with an oil battery facility, a fluid injection facility or a gas compression or processing facility, and include a pipe or system of pipes for the transportation of fluids within any of those facilities.

Figure 1 provides an illustration of the application of the flowline definition to pipeline systems.

Note: Group pipelines leaving a satellite and entering a battery facility are considered as flowlines. A satellite for the purposes of measuring production is not considered as a processing facility.

Flowlines are distinguished from other pipelines based on the application of *The Surface Rights Acquisition and Compensation Act* (SRACA). Surface rights for purposes of constructing a flowline can be acquired under SRACA by application to the Surface Rights Board of Arbitration. Rights of entry for all other licensed pipelines may be acquired under the provisions of Part III of the PA.

Unless otherwise specified, in this Directive, a reference to a pipeline includes a flowline.

Figure 1 Flowlines

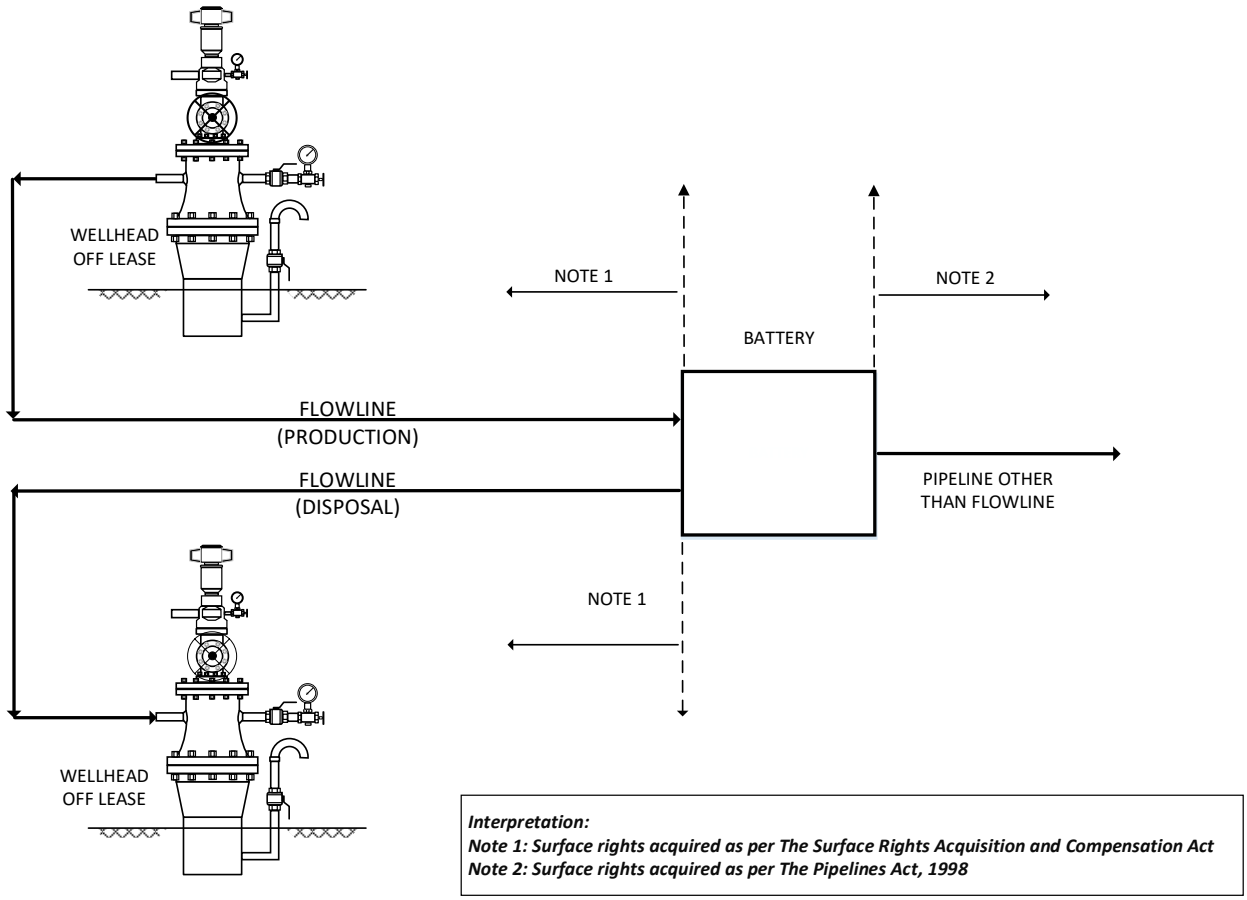

1.5 Other Regulatory Requirements

A pipeline licence or any other approval issued by ER is approval for matters that fall within the jurisdiction of the PA. Applicants for a pipeline licence are advised to contact the following agencies or government ministries to determine other regulatory requirements related to the design, construction and operation of a proposed pipeline:

- all municipalities that the pipeline crosses or is located within;
- the Ministry of Environment;
- if the pipeline is located within 2.5 kilometres of the boundaries of an urban municipality, the Ministry of Government Relations;
- if there are any archeological sites along the pipeline right of way; the Ministry of Parks, Culture and Sport;
- if a pipeline is located within 90 metres of the surveyed limit of a provincial highway or within 30 metres of the survey limit of a road other than a provincial highway;
- if the pipeline is located within 30 metres of a utility or pipeline, the operator of that utility or pipeline;
- if the pipeline is for fresh water transportation, the Saskatchewan Water Security Agency;
- if the pipeline crosses crown agricultural land, the Ministry of Agriculture;
- any other approvals required under Saskatchewan or other applicable laws.

1.6 Definitions

The following definitions apply to the interpretation of other terms that appear in this Directive.

"abandonment" means the permanent deactivation of a pipeline or part of a pipeline, whether or not it is removed.

"BA ID" means the business associate identification number assigned to an approved user of IRIS.

"bank" means the rising ground bordering a water body or watercourse that serves to confine the water to the channel or bed.

"break (valley)" means the point where a change in slope of the ground demarks uplands from the fluvial hills dropping into valley bottom, which includes watercourse and coulees.

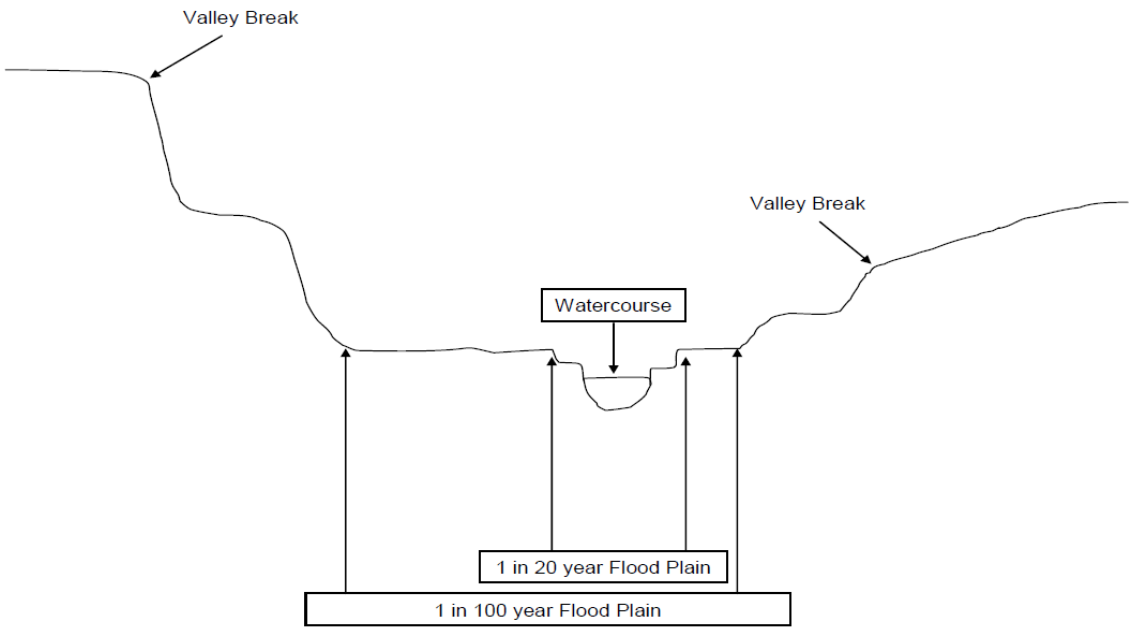

"designated pipeline" means any of the following:

(a) A flowline that
  (i) was not required to be licensed until of the repeal of section 4 of the PA; and
  (ii) is in existence before January 20, 2021; or

(b) A previously exempt pipeline as defined in subsection 5(1) of the PA.

"discontinuation" means the deactivation of a pipeline or part of a pipeline in accordance with CSA Z662, where the licence for that pipeline remains in effect.

"free-standing liner" means a tubular product that is inserted into a buried pipeline to form a separate free-standing pressure-containing pipe.

"infrastructure type" means an entity that represents any type of oil and gas related physical asset, such as a Well, Battery, Facility, Terminal, Pipeline, etc.

"professional geoscientist" means a professional geoscientist whose registration pursuant to *The Professional Engineering and Geoscience Professions Act* is in good standing.

"horizontal directional drilling (HDD)" means a trenchless construction method using equipment with a guided drill head to create an underground path for pipe installation by pushing or pulling.

"**implementation date**" means January 20, 2020.

"**IRIS"** means the Integrated Resource Information System.

"no drill zone" means the upper limit of the drill path as determined by a professional engineer. This limit is intended to ensure the drill path is maintained within subsurface soil suitable for directional drilling and to ensure the drill path is below zones where there are slope stability concerns.

"pipeline segment/segments" means a pipeline that is identified using a segment identification under a pipeline licence number.

"**professional engineer**" means a professional engineer whose registration pursuant to *The Professional Engineering and Geoscience Professions Act* is in good standing.

"reactivation" means the resumption of a pipeline that has been discontinued or abandoned.

"repair" means a temporary sleeve, permanent sleeve, cut out, or other fix that is a continuous segment less than 100 meters in length within the existing right of way.

"replacement" means removing a section pipe greater than 100 meters within the existing right of way and laying new pipe in the same location with the same geometry.

"re-route" means routing a new section of pipe around an existing section of pipe (which may or may not remain in the ground) with the re-routed section having different geometry from the old section of pipe.

"shapefile" means an ESRI vector data storage format for storing the location, shape, and attributes of geographic features. It is stored as a set of related files and contains one feature class.

"temporary pipeline" means a pipeline that is:

(a) above ground;
(b) not located wholly within the boundaries governed by a surface lease or by contiguous surface leases; and
(c) will be in use for a period of no more than 180 days.

“trenchless” means any technique whereby pipe is installed without the excavation of a continuous open ditch (i.e., trench). Plowing is not considered to be a trenchless installation.

“watercourse” means a gully, valley floor, drainage ditch or any other channel, including any artificial channel, in which water flows either permanently or intermittently.

“watercourse intermittent” means small stream channels that small springs are the main source outside periods of spring runoff and heavy rainfall. The channel development of the small stream is distinguishable. The small stream has some bank development and the channel width is less than 1.5 meters.

Chapter 2: Technical Standards and Requirements

2.1 Technical Standards

- A reference in this Directive to the CSA Z662 means the most recent published version of the standard issued by the Canadian Standards Association (CSA).

- Unless otherwise approved by the minister, the minimum requirements for the design, construction, operation, modification, discontinuation and abandonment of pipelines must be in accordance with CSA Z662.

- Where any conflict arises between this Directive and any requirement in the CSA Z662, the requirement in this Directive prevails unless otherwise approved.

2.2 Exemption from Standard

If the appropriate CSA standard requires that a pipeline be altered because of a change in the pipeline's surroundings, or due to a revision to the standard, the minister may exempt the pipeline from the required modifications if the operator demonstrates that the pipeline is suitable and safe for continued operation under the original standard.

2.3 Approval of Non-standard Materials or Methods

If an applicant proposes to use pipeline materials, pipeline components, joining methods, construction methods, repair methods or maintenance methods other than those that are included or referenced in CSA Z662, the applicant shall provide sufficient technical information concerning the materials, components or methods to allow the minister to determine whether the materials, components or methods are acceptable for the proposed use. The minister may, if satisfied of their suitability, approve the use of those materials or components.

2.4 Pipeline Design

A professional engineer shall seal the design of a pipeline other than a flowline in accordance with the standards mentioned in section 2.1.

A typical design standard sealed by a professional engineer can be used for flowlines.

2.5 Pressure Testing

2.5.1 Pressure Testing Required

No operator shall commence operation of a pipeline until all sections of the pipeline have been pressure tested in accordance with CSA Z662 unless otherwise specified by the CSA Z662.

Pressure testing of a pipeline performing reactivation will be at the discretion of the licence holder, based on the best method in accordance with CSA Z662 to ensure the integrity of the pipeline. If a pressure test is not completed for reactivation, the licence holder shall submit an application through IRIS with appropriate justification and documentation to support that the pipeline is fit for service.

The operator of a pipeline other than a flowline for which a licence has been issued shall submit to IRIS the results of a pressure test conducted pursuant to this section.

2.5.2 Notice of Pressure Test

A licence holder shall notify ER through IRIS a minimum of 48 hours prior to the scheduled date of any pressure test that:

- is conducted for the purpose of obtaining a leave to open; or
- exceeds the maximum operating pressure (MOP).

2.5.3 Minimum Test Pressure

Notwithstanding CSA Z662, if a gas pipeline is conveying more than 1 per cent hydrogen sulfide (H_2S), the pipeline must be pressure tested to a minimum of 1.4 times the maximum operating pressure and not greater than the maximum test pressure prescribed in CSA Z662.

2.5.4 Pressure and Temperature Recording Requirements

Pressure and temperature readings must be taken and logged at a minimum interval of 30 minutes with the exception of one-hour pressure tests, where readings must be taken and logged at minimum intervals of 15 minutes.

The instrument used to record the pressure during the pressure test must be selected to enable the pressure reading to occur within 25 per cent and 90 per cent of the full range of the instrument.

2.6 Operating Pressure

2.6.1 Maximum Operating Pressure

No pipeline for which a licence has been issued is to be operated at a pressure exceeding the MOP specified in the approved Leave to Open.

2.6.2 Overpressure Protection

A pressure control system and overpressure protection must be installed at any point in a pipeline where supply from any source makes it possible to increase the pressure in the pipeline above its MOP.

2.6.3 Overpressure Protection for Flowlines Connected to Artificial Lift Systems

Where artificial lift systems make it possible to increase the pressure in the flowline above its MOP, the flowline must have two independently functioning overpressure protection devices installed to protect it from experiencing pressures that do not exceed the MOP by more than 10 per cent or 35 kPa, whichever is greater. The licence holder must ensure the devices are inspected, tested and meet the requirements of CSA Z662. Alternatively, the operator of the flowline must have:

- a single overpressure protection device installed that will protect the flowline from experiencing pressures that do not exceed the MOP by more than 10 per cent or 35 kPa, whichever is greater;
- a competent individual inspecting and testing the overpressure protection device on a monthly basis; and
- a competent instrumentation technician conducting annual inspections and tests, with a maximum interval of 18 months between such activities, on the overpressure protection device to ensure that the monthly inspections and tests are conducted correctly and that the device is not defective or malfunctioning. Operators may use an alternative inspection and testing time interval if the suitability of the interval is demonstrated.

If an overpressure protection device is found to be defective or malfunctioning, the flowline must cease operation and the device must be repaired or replaced before resuming operation. Operator must maintain adequate inspection and testing records for the overpressure protection device and must provide records to ER upon request.

Inspection and testing records must document:

- the data and information used in inspecting and testing the device;
- the results of the inspection and tests; and
- the resolution details of a defective or malfunctioning device.

Chapter 3: Ground Disturbance, Incidents and other Requirements

3.1 Pipeline to be Located

An operator shall locate a pipeline within 72 hours, excluding weekends and holidays, when requested to do so by anyone intending to undertake a ground disturbance.

3.2 Incidents

Pipeline incidents must be managed and reported in accordance with *Directive PNG014: Incident Reporting Requirements*.

3.3 Construction Notification

A licence holder shall notify ER through IRIS, a minimum of 24 hours prior to the scheduled commencement date of pipeline construction including any following activities, whichever occurs first:

- stripping the right of way;
- laying down a pipe;
- pipe stringing, bending; or
- welding and facility installation

Construction activities associated with discontinuation and abandonment of a pipeline are exempt from notification requirements.

3.4 Local Spill Response Units

Every operator of a licensed pipeline shall be a member in good standing of the spill response cooperative operating in the geographic area in which the pipeline is situated.

3.5 Pipeline Integrity

Operators must actively maintain the integrity of a pipeline in accordance with CSA Z662 and this Directive. If ER has reasonable grounds for concern about the integrity of a pipeline, ER may issue a notice at any time to an operator to carry out:

- additional pressure tests on the pipeline or any portion of the pipeline;
- special electronic surveys on the pipeline or any portion of the pipeline

The operator shall comply with the request within the period and in the form specified by ER in the notice.

Chapter 4: Watercourse and Watercourse Crossing

4.1 Large Permanent Watercourses

A large permanent watercourse is a river with permanent water flow with a well-defined flood plain and wide valley bottom with a non-vegetated channel. In southern Saskatchewan, these watercourses include:

- the North and South Saskatchewan Rivers;
- the Saskatchewan River;
- the Souris River;
- the Moose Jaw River;
- the Qu-Appelle River;
- the Frenchman River; and
- The Battle River.

Large permanent watercourses also include any lakes, ponds, marshes or sloughs situated along the course of these rivers.

The standard watercourse crossing design and construction requirement for watercourse crossings of a large permanent watercourse is HDD. Applicants seeking to construct a pipeline across these watercourses shall submit the following documents prior to the commence of HDD construction:

- HDD feasibility report;
- A Hydro-fracture analysis;
- HDD Crossing Profile;
- Drilling Execution Plan; and
- Geotechnical report.

The minimum entry and exit set back distances for HDD for a large permanent watercourse are **100 meters**. The minister may alter this requirement if the minister determines that the physical circumstances surrounding a proposed watercourse crossing justify a larger or smaller setback based on technical and engineering analysis.

4.2 Small Permanent Watercourses

A small permanent watercourse is a permanent creek or stream with a well-defined bank and channel. These watercourses may be fish-bearing.

Small permanent watercourses also include any lakes, ponds, marshes or sloughs situated along the course of these watercourses.

The standard watercourse crossing method for small permanent watercourses is HDD. Applicants seeking to construct a pipeline using HDD across a small permanent watercourse shall submit the following documents prior to the commence of HDD construction:

- HDD feasibility report;
- Geotechnical report;
- Drilling Execution Plan; and
- HDD Crossing Profile

The minimum entry and exit setback distances for HDD for a small permanent watercourse are **45 meters**. The minister may alter this requirement if the minister determines that the physical circumstances surrounding a proposed watercourse crossing justify a larger or smaller setback based on technical and engineering analysis.

4.3 Additional Information for Permanent Watercourses

Setback distances for permanent watercourses for HDD are to be measured:

- From the top of the valley break; or
- If the valley break is undefined, from the top of the bank.

The break or bank is determined by the intersection of the slope angle with the upland ground elevation.

Watercourses are highly variable in terms of width, flow rates and geomorphology. Applicants are encouraged to contact the ER Service Desk at an early stage of planning for a determination of watercourse type. ER will provide a site determination for purposes of preparing an application together with the supporting documentation.

4.4 Non-standard Watercourse Crossing Applications

Section 4.1 and 4.2 set out standard installation method requirements for watercourse crossings. The minister may consider other crossing designs or methods of installation that:

- Meet the requirements of CSA Z662;
- Provide, in the opinion of the minister, a reasonable level of protection to public safety or the environment.

Applicants seeking a licence for a non-standard watercourse crossing should contact the ER Service Desk before submitting an application to determine documents and technical information that the minister will require in considering the licence application.

4.5 Description of Documents

The following is a description of the technical documents referred to in this chapter and their requirements related to the preparation. All required documents can be combined into a single document for submission.

Drilling Execution Plan
This report must show the drilling execution plan for the HDD.

Geotechnical Report
This report must describe the findings of a geotechnical investigation of the water crossing. The geotechnical investigation is to be conducted for the purpose of HDD design and must include a slope stability assessment.

The Geotechnical Report must be completed by a professional geoscientist or professional engineer.

HDD Crossing Profile
An Issued for Construction (IFC) drawing which shows the proposed drill path, the length for all tangent segments, the radius and length of all arc segments, existing ground elevation, the top of bank or top of break, entry and exit angles, "No Drill Zones," the location and stratigraphy of investigative boreholes. The drawing must also be accompanied with construction notes and when applicable, an annular pressure chart.

HDD Feasibility Report
This report must provide an assessment of site conditions and a review of the HDD design and installation, taking into consideration all available geotechnical information. The report must also provide a determination as to whether HDD is feasible and provide any recommendations to mitigate risk.

The HDD feasibility report must be prepared by a professional engineer.

Hydro-fracture Analysis
This analysis must model the expected limiting overburden pressure and expected annular pressures along the drill path, to assess the likelihood of an inadvertent release of drilling fluids. The results of the analysis should also be taken into consideration in the Drilling Execution Plan.

The Hydro-fracture Analysis must be prepared by a professional engineer.

Chapter 5: Application Requirements

5.1 Licence Expiry

A licence issued for the construction of a pipeline expires two years from the date of issuance if the construction notice has not been received within that period.

5.2 Application for Approval Required

5.2.1 an application must be submitted through IRIS and application approval must be obtained before performing any of the following activities:

- constructing a new pipeline;
- constructing a new pipeline segment that is to be added to an existing pipeline licence;
- free-standing liner installation;
- pipeline replacement;
- pipeline re-route;
- free-standing liner removal;
- pipeline removal;
- pipeline reactivation;
- line split;
- flow reversal;
- changing the operating parameters of an existing pipeline.

5.2.2 A Leave to Open application must be submitted and approved through IRIS prior to operating a pipeline.

This requirement is exempt when operation commences immediately after completing a pipeline repair as defined in this directive.

5.3 Reporting Required

Application and approval are not required before performing pipeline abandonment, pipeline discontinuation and pipeline repair as defined in this Directive.

Abandonment and Discontinuation

A licence holder shall submit a report using IRIS within 90 days of completion of the work of abandonment or discontinuation of a pipeline.

Repair

A licence holder shall submit a report to IRIS within 90 days of completion of the work if performing a pipeline repair that meets one or more of the following conditions:

- the repair is the result of an incident reported in accordance with Directive PNG 014;
- the repair is the result of pipeline exposure due to erosion;
- the repair is the result of ground movement;
- the repair is located in a class location greater than 1 as defined in the CSA Z662;
- the repair is within the setback of permanent watercourse specified in chapter 4;
- The repair does not use a permanent sleeve and the damaged pipe is not removed.

5.4 Survey Plan

The applicant must submit a survey plan that meets the requirements of Appendix 2 in the application.

A survey plan is not required with respect to fixing or modifications to a pipeline within the existing right of way unless the fixing or modifications require an additional right of way.

5.5 Pipeline Spatial Data

The applicant must submit shapefiles containing spatial data on a pipeline that meets the requirements specified in Appendix 1.

Shapefile is not required with respect to fixing or modifications to a pipeline within the existing right of way unless the fixing or modifications require an additional right of way.

5.6 As-Built Survey and Spatial Data

If a proposed pipeline route deviates outside the existing right of way during construction procedures, the licence holder shall submit the as-built survey and spatial data of the pipeline through IRIS within 30 days of reporting construction completion.

5.7 Required Data for Licence Application

As part of the application for a licence or adding segments to an existing licence, the applicant must provide licence level data attributes and segment level data attributes. Licence level data cannot be changed when adding segments to an existing licence.

Licence attributes

The mandatory licence level data attributes include:

- licence type;
- the substance to be transported by the pipeline
- maximum H_2S concentration; and
- gas-phase indicator determined in accordance with CSA Z662, if the transported substance is liquid.

Segment attributes

The mandatory segment level data attributes include:

- length of the segment;
- infrastructure type at the start and end of the segment;
- designated class location in accordance with CSA Z662;
- material used for manufacturing the segment including material type, standard, grade, and category;
- outside diameter;
- wall thickness of the pipe;
- the designed depth that the segment is buried;
- the type of internal and external protective coating to be used on the segment;
- the design pressure;
- the maximum operating pressure that the pipeline is expected to be qualified to by pressure testing;
- effective H_2S partial pressure, if transport liquids without a gas phase;
- indication whether the segment will frequently transport substance in both directions;
- the type of watercourse that the segment crosses; and
- any other information that the minister may require.

Chapter 6: Legacy Licence

6.1 Legacy Licence

"legacy licence" as defined in Part VI of the PA, means a licence issued:

(i) before the implementation date; or

(ii) after the implementation date if an application for the licence that is satisfactory to the minister was received by the minister before the implementation date.

A legacy licence will be registered in IRIS by the minister based on the information on file with ER as of the implementation date. Errors and corrections will be made to the registry in accordance with the procedures set out in the PA and PALR.

Licence holders shall prepare shapefiles in accordance with Appendix 1 and submit them through IRIS no later than 24 months following the implementation date. Shapefiles submitted prior to the implementation date that meet ER's requirements will be recorded in IRIS as of the implementation date.

Chapter 7: Retroactive Licence

7.1 Retroactive Licence Required

Owners of designated pipelines shall apply through IRIS to register a retroactive licence on or after January 20, 2021 and before January 20, 2024 as provided in Part 4, Division 2 of the PALR.

Owners of designated pipelines may apply through IRIS to register a retroactive licence after January 20, 2020 and before January 20, 2021.

7.2 Information Required for a Retroactive Licence

7.2.1 Flowlines

Table 4 sets out the information required to be submitted to IRIS in order to register a retroactive licence for flowlines.

Table 4: Data Required: Flowlines

Status	Data Element
Operating	• Owner BA ID • Industry Licence Reference Number • Segment Count[1] • Licence Type • Transported Substance • Line Number[2] • Segment Status[3] • From/To Infrastructure Type • From/To Latitude (if no shapefile provided) • From/To Longitude (if no shapefile provided) • MOP
Discontinued or abandoned	• Owner BA ID • Industry Licence Reference Number • Segment Count[1] • Licence Type • Line Number[2] • Segment Status[3] • From/To Infrastructure Type • From/To Latitude (if no shapefile provided) • From/To Longitude (if no shapefile provided)

Note:
1. Segment count means an integer field that identifies the number of segments for an individual licence in the Retroactive Licensing Template.
2. Line number means a unique operator generated integer field that is assigned to a segment within the shapefile and in the Segment Tab of the Retroactive Licensing Template in order to associate the segments in the Retroactive Licensing Template to their geometries in the shapefile.
3. Segment status means a status assigned to a segment as determined by a submission into IRIS.

7.2.2 Pipelines other than Flowlines

Table 5 sets out the information required to be submitted to IRIS in order to register a retroactive licence for pipelines other than flowlines.

Table 5: Data Required: Pipelines other than Flowlines

Status	Data Elements
Operating	• Owner BA ID • Industry Licence Reference Number • Segment Count[1] • Licence Type • Transported Substance • Gas-Phase indicator determined in accordance with CSA Z662, if the transported substance is liquid. • Maximum H_2S Concentration • Line Number[2] • Segment Status[3] • Designed for Sour Service Indicator • From/To Infrastructure Type • Class Location designated in accordance with CSA Z662 • H_2S partial pressure, if transport liquids without a gas phase • MOP • Bidirectional Flow Indicator • Watercourse Type • Material Type • Material Standard • Material Grade • Material Category (if Material Type = Steel/Stainless Steel) • Yield Strength • Outside Diameter • Wall Thickness • Internal Protection • External Protection • Minimum Cover Depth
Discontinued or abandoned	• Owner BA ID • Industry Licence Reference Number • Segment Count[1] • Licence Type • Line Number[2] • Segment Status[3] • From/To Infrastructure Type • Class Location • Material Type

Note:
1.2. 3. See note for table 4 for explanation.

7.3 Spatial Data for a Designated Pipeline

An application for retroactively licensing of a designated pipeline other than flowline must contain a shapefile that meets the requirements specified in Appendix 1.

If the segment data of a flowline at the possession of the applicant, an application for retroactively licensing of a flowline must contain a shapefile meets the requirements specified in Appendix 1.

If a shapefile cannot be rendered for a flowline during the retroactive licensing process, the start and end location coordinates from the various infrastructure types as decimal degrees must be submitted. ER will derive a geospatial shapefile for the licence based on the information submitted.

7.4 Survey Plan for a Designated Pipeline

Once a designated pipeline other than flowline is retroactively licensed, the licence holder must submit a survey plan that meets the requirements specified in Appendix 2. The survey plan must be submitted through IRIS within 30 days of licence issuing.

Once a designated flowline is retroactively licensed, if the survey plan for the flowline is at the possession of the licence holder, the licence holder must submit a survey plan that meets the requirements specified in Appendix 2. The survey plan must be submitted through IRIS within 30 days of licence issuing.

Appendix 1: Spatial Data (Shapefiles) Submission Requirements

This appendix sets out the standards for the preparation and submission of spatial data used for purposes of mapping the location of pipelines including flowlines.

Shapefile must be submitted for:

- any new pipeline (including flowline) applications submitted on and after the implementation date;
- any pipelines that were licensed prior to the implementation date.
- any retroactive licence applications for designated pipelines other than flowlines; and
- any retroactive licence applications for unlicensed flowline, if the segment data is readily accessible.

If a shapefile cannot be rendered for an unlicensed flowline, the start and end location coordinates from the various infrastructure types as decimal degrees must be submitted. ER will derive a geospatial shapefile for the licence based on the information submitted.

1. Spatial Data Submission

Spatial data must be provided in a shapefile format.

Shapefiles are to be submitted through IRIS as a Zip archive file. The archive file must include the following file types: .SHP, .SHX, .DBF, .PRJ. Other file types generated by the mapping application may be included in the file.

Note: It is recommended that data file names include the name of the pipeline owner or its BA ID to provide for easy identification of electronic submissions.

2. Spatial Data Standards

2.1 Referencing Segment Start and End Points

Pipeline segment spatial data must be in the form of a polyline that represents the location of the pipeline within the right-of-way derived from a survey plan.

The start point and end point of each pipeline segment must be the actual physical start point and end point of that pipeline segment.

Note: Well or facility site lease boundaries or break points for changes in design code or code of construction are not to be considered when referencing a pipeline segment. The polyline must show the physical extent of the pipeline segment from its start point to the end point of the right of way.

If the right-of-way of a pipeline does not extend beyond the edge of lease boundary, then the start and end points of the pipeline must be the start and end points of the edge of the lease boundary.

2.2 Spatial Datum

Table 1 sets out the spatial datum standards for all shapefiles submitted to IRIS in accordance with this Directive.

Table: 1: Spatial Datum Standards

Item	**Standard**
Datum	NAD83(CSRS) UTM Extended Zone 13N
WKID	2957
Authority	EPSG
Projection	Transverse Mercator
False Easting	500000.0
False Northing	0.0
Central Meridian	-105.0
Scale Factor	0.9996
Latitude of Origin	0.0
Linear Unit	Meter (1.0)
Geographic Coordinate System	NAD83_Canadian_Spatial_Reference_System
Angular Unit	Degree (0.017453292519943295)
Prime Meridian	Greenwich (0.0)
Datum	D_North_American_1983_CSRS
Spheroid	GRS_1980
Semi-major Axis	6378137.0
Semi-minor Axis	6356752.314140356
Inverse Flattening	298.257222101

3. Pipeline Segment Data

All shapefiles must include the following data:

Feature Name: Pipeline Segment
Description: Information describing the pipeline segment (polyline geometry represents the location of the segment within the surveyed right-of-way as derived from a survey plan)
Geometry: polyline
Pipeline Segment Attributes:

FID	Object ID	Mandatory	System Defined Unique identifier
GEOM	Geometry	Mandatory	The spatial geometry data
LineNo	Long Integer	Mandatory	A unique number to represent the line in the provided shapefile.
PrevSegNo	Text (50)	Mandatory for segment amendment	Previous Segment Number; this attribute is used for pipeline amendment applications. When used, it must match the Pipeline Segment Number (Segment Alias) on an existing pipeline segment within IRIS. This attribute **must be blank** for a New Pipeline Licence application.

4. Pipeline Segment Business Rules

- Pipeline segments must not self-intersect or self-overlap.
- Pipeline segments must not extend beyond the boundary of Saskatchewan.
- All pipeline segments except bi-direction flow segments must be digitized in the direction of the substance flowing through the pipeline.

Appendix 2: Pipeline Survey Requirements

1. New Survey

For a pipeline constructed on and after the implementation date, survey plan must contain minimum components listed below:

- Be in a scale acceptable to the Minister;
- Be prepared from a survey made by a Saskatchewan Land Surveyor, within the meaning
- of The Land Surveyors and Professional Surveyors Act;
- Be dated, certified and signed by the surveyor, with the signature duly witnessed

Show the location of the proposed pipeline in relation to:

- Right of way of the proposed pipeline;
- The boundaries of the section;

Show the location of the following features within a 200m buffer of the proposed

- Pipeline Right-of-way;
- Water bodies
- Mines, whether worked or abandoned;
- Existing wells, Lease boundaries and access roads;
- Existing batteries and facilities;
- Roadways, road allowances;
- Railways, Pipelines, Power lines and any other Right-of-Ways
- Aircraft Runways or taxiways; and
- Permanent Structures of every kind

Have All measurements and distances tied to:

- A survey monument or evidence of a survey monument in a surveyed area; or
- A surveyed baseline, or
- A prominent topographical feature acceptable to the Minister in an unsurveyed area.

Show area of proposed right of way in each parcel

Utilize the following Datum:

- North American Datum 1983 (CSRS) (Epoch 1997) UTM Extended Zone 13N

2. Historical Survey

For a pipeline constructed before the implementation date, survey plan must contain minimum components listed below:

- Show the location of the proposed pipeline in relation to the right of way of the proposed pipeline

Appendix 3: Applicable Legislation and Design Requirements for Pipeline and Pressure Equipment

1. Background

Appendix 3 is intended to provide an interpretation of interrelationships of applicable governing legislation and design requirements for a pipeline and pressure equipment.

This appendix is for interpretation purposes only and does not replace the requirements set forth in applicable acts, regulations, directives and standards.

Although every effort has been made to ensure that the information provided is accurate, users are still responsible for ensuring that the facility or pipeline complies with all requirements, irrespective of the information provided herein.

2. Governing legislation overview

Pursuant to section 4-2 of the PALR, the following pipelines are exempt from licensing:

(a) pipelines that are located wholly within the boundaries governed by a surface lease;

(b) pipelines that are located wholly within contiguous surface leases;

(c) any piping situated between designated control point A and designated control point B as set out in this Appendix; and

(d) temporary pipelines.

3. Detailed interpretation of requirements for pipelines situated between designated control point A and designated control point B and pressure equipment

In general, the following should be considered as a basis for interpretation:

- Piping situated between designated control point A and B in figures 3.1-3.9 does not require a pipeline licence.
- Piping situated between designated control point A and B in figures 3.1-3.9 must be designed and constructed in accordance with *CSA Z662* or *ASME B31.3* standards.
- With the exception of a single valve on the wellhead outlet and piping, the last valve before a pipeline leaves the lease is considered to be a part of the licence.
- For pipelines entering into a header manifold, the jurisdictional break may reside on the individual inlet pipelines or on the header piping inlet to the facility, depending on the location of the block valve(s).
- Design and licence requirements for wellheads are not covered in this interpretation.

3.1 Well site with no dehydrator or separator, with or without a lease block valve, including a pipeline leaving the well site

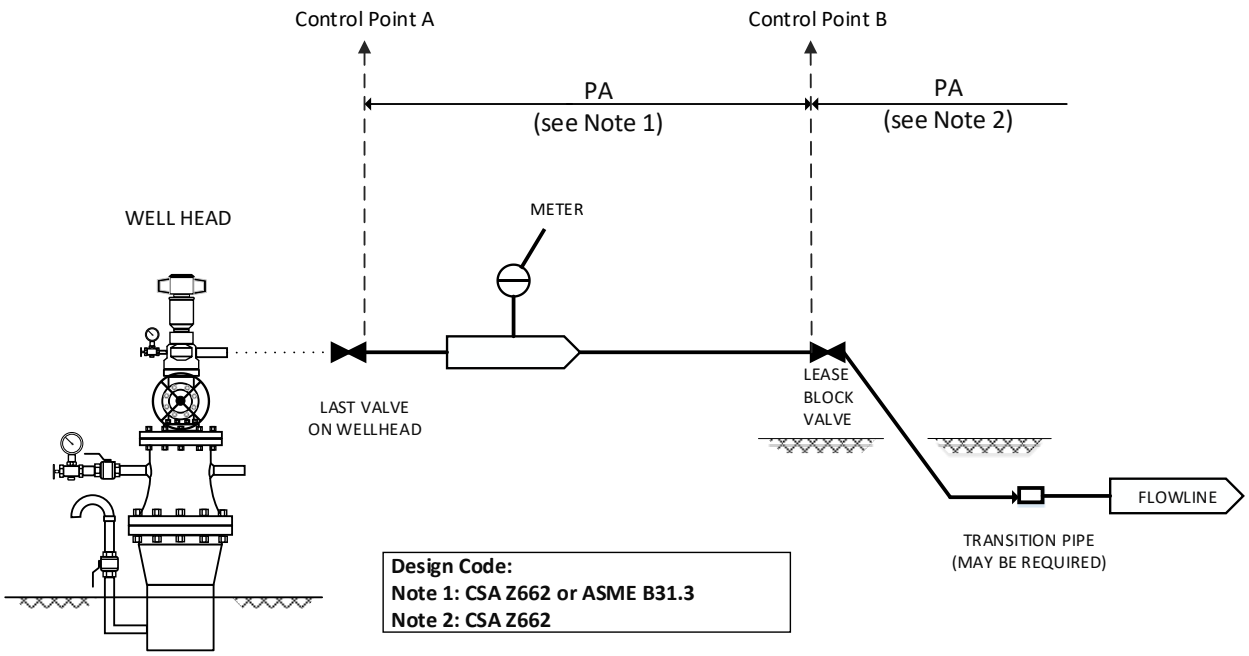

Licensing Requirements:	Pipeline leaving designated control point B at the last lease block valve requires a flowline licence. If designated control point B is located at the wellhead, the licence applies from that point.
Design Jurisdiction (Design Review and Acceptance):	**ER:** Pipeline leaving designated control point B at the last lease block valve. If designated control point B is located at the wellhead, from that point.
Design Code and Requirements:	**CSA Z662 or ASME B31.3:** Piping from designated control point A (last valve on wellhead) to designated control point B (last lease block valve). **CSA Z662:** Pipeline leaving designated control point B (last lease block valve).
Comments:	Metering requirements are set forth in Directive PNG017.

3.2 Metering station on wholly owned lease

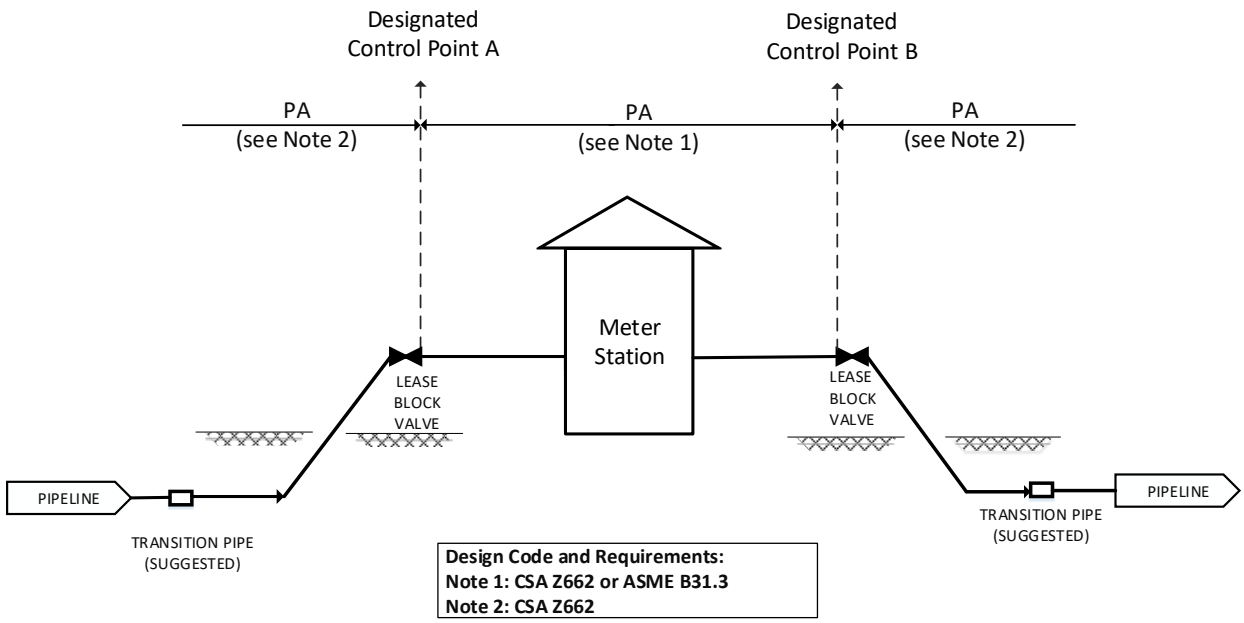

Licensing Requirements:	Pipeline up to designated control point A at the first lease block valve requires a pipeline licence. Pipeline leaving designated control point B at the last lease block valve requires a pipeline licence.
Design Jurisdiction (Design Review and Acceptance):	**ER:** Pipeline up to designated control point A at the first lease block valve. **ER:** Pipeline from designated control point B at the last lease block valve.
Design Code and Requirements:	**CSA Z662 or ASME B31.3:** Piping between designated control point A and B from the first lease block valve to the last lease block valve. **CSA Z662:** Pipeline up to designated control point A at the first lease block valve **CSA Z662:** Pipeline leaving designated control point B at the last lease block valve.

3.3 Well site with well site heater, with or without a lease block valve, including a pipeline leaving the well site

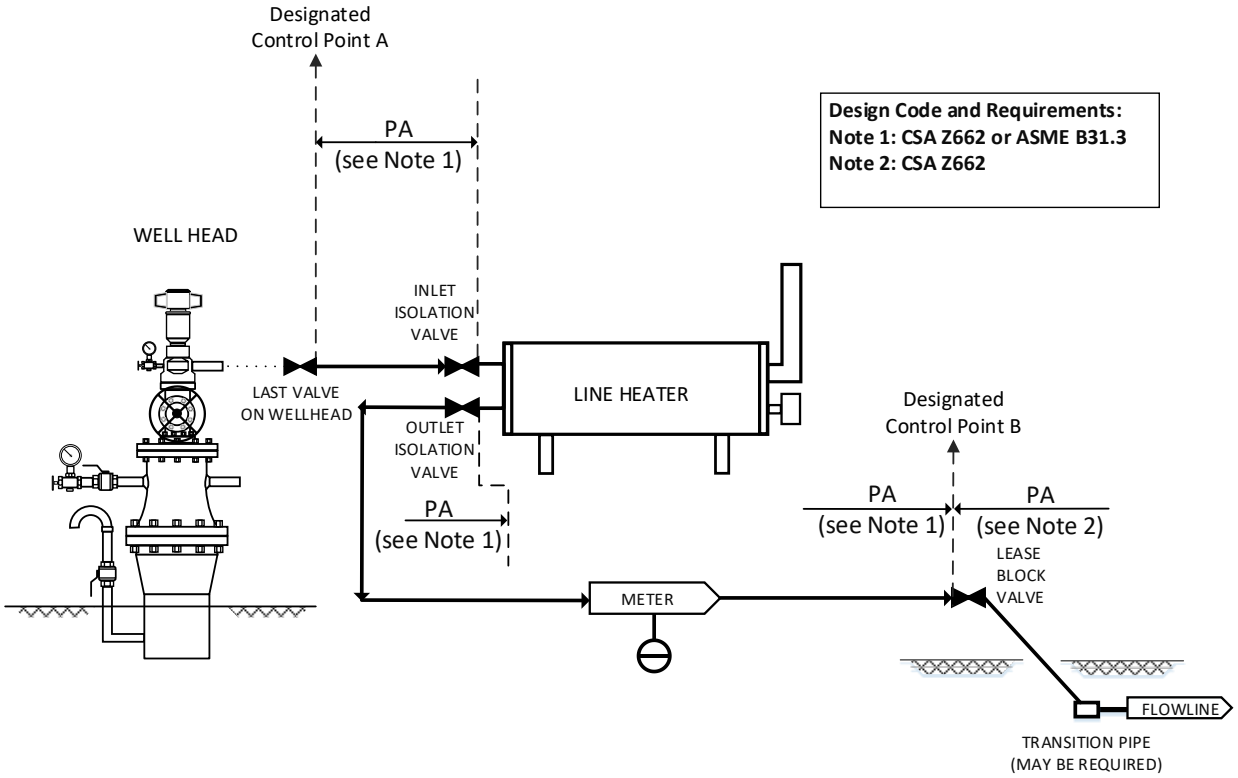

Licensing Requirements:	Pipeline leaving designated control point B at the last lease block valve is covered under a flowline licence. If the lease block valve is located at the line heater outlet, the licence applies from that point.
Design Jurisdiction (Design Review and Acceptance):	**ER:** Pipeline leaving designated control point B at the last lease block valve. **ER:** If lease block valve is located at the outlet flange of line heater, the piping from the outlet valve on the line heater to the lease block valve.
Design Code and Requirements:	**CSA Z662 or ASME B31.3:** Piping from the wellhead to the inlet valve on the line heater and from the outlet valve on the line heater to the lease block valve. **CSA Z662:** Pipeline from the lease block valve.
Comments:	ER recommends following CSA B51 standards for the wellsite heater coil from the inlet flange to the outlet flange. For inspection of installed line heaters, it is recommended to follow the latest edition of API RP 573.

3.4 Well site with a dehydrator and/or separator, with or without a lease block valve, including a pipeline leaving the well site

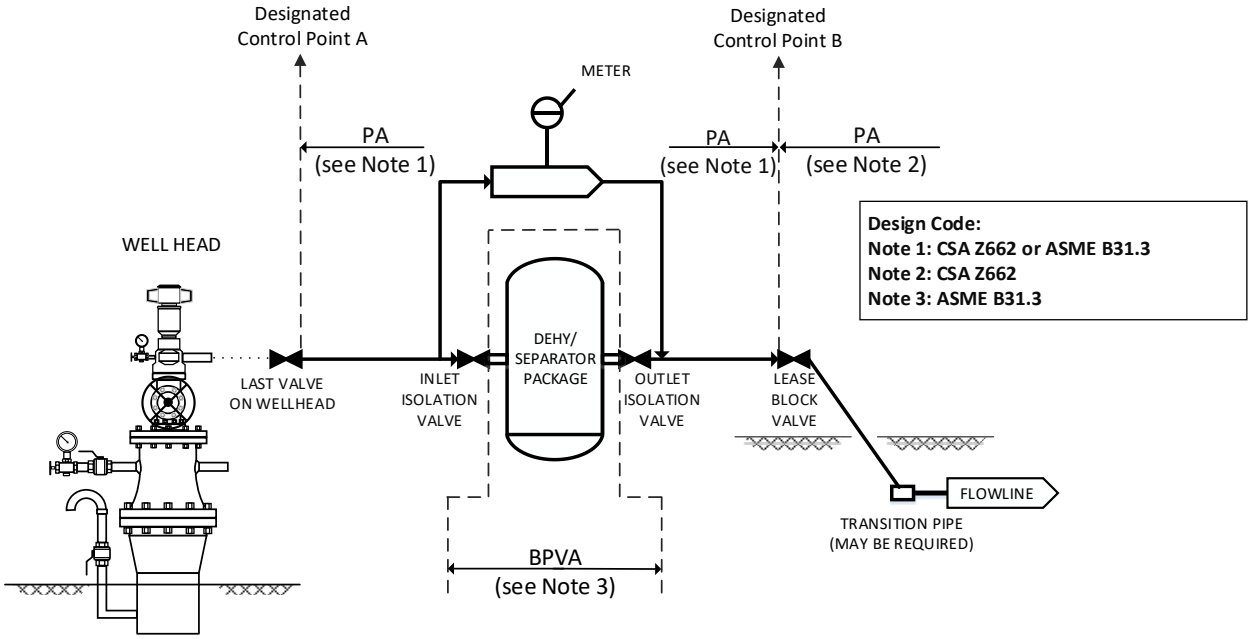

Licence Requirements:	Pipeline leaving designated control point B at the lease block valve requires a flowline licence.
Design Jurisdiction (Design Review and Acceptance):	**TSASK:** Piping and vessels between the inlet and outlet valves on the dehydrator and/or separator. **ER:** Pipeline from the lease block valve leaving the lease boundary.
Design Code or Requirements:	**CSA Z662 or ASME B31.3:** Piping after the last valve on the wellhead to the inlet valve on the dehydrator and/or separator and from the outlet valve leaving the dehydrator and/or separator up to the lease block valve. **CSA B51:** Dehydrators, separators, and all associated pressure piping must meet the requirements of CSA B51. CSA B51 refers to ASME B31.3 for piping design. **CSA Z662:** Pipeline leaving designated control point B at the lease block valve.
Comments:	The pressure piping system associated with the dehydrator and/or separator must be registered with TSASK when the aggregate internal capacity is greater than 0.5 cubic meters.

3.5 Gas satellite or group gas gathering facility

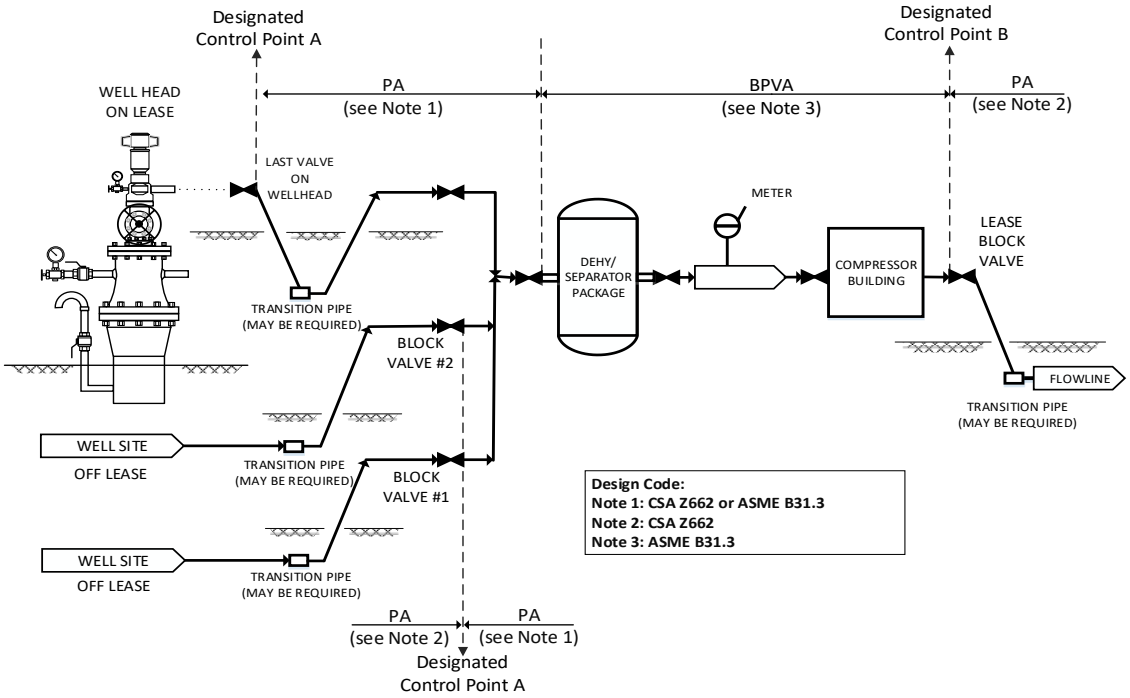

Licensing Requirements:	Pipeline from off lease wells to designated control point A (block valves #1 and #2) on the header manifold upstream of the dehy/separator package is covered under a flowline licence. Pipeline leaving designated control point B (last lease block valve) is covered under a flowline licence.
Design Jurisdiction (Design Review and Acceptance):	**ER:** Piping from the off-lease well(s) to designated control point A (block valve on the header manifold upstream of the dehy/separator package). **TSASK:** Dehydrators, separators, meter runs, compressors through to the last lease block valve. **ER:** Pipeline leaving the lease boundary.
Design Code or Requirements:	**CSA Z662:** Piping from an off lease wellhead to designated control point A (block valve on the manifold upstream of the dehydrator/separator package). **CSA Z662 or ASME B31.3:** Piping from an on lease wellhead to designated control point A (block valve on the manifold upstream of the dehydrator/separator package). **CSA B51:** Dehydrators, separators, and all associated pressure piping must meet the requirements of CSA B51. CSA B51 refers to ASME B31.3 for piping design. **CSA Z662:** Pipeline leaving designated control point B at last lease block valve.
Comments:	Gas compressor facilities that are part of production operations of gas wells or groups of gas wells that do not have a combined power rating equal or greater than 186.5 kW (250 hp) do not require a facility license in accordance with Directive PNG001.

3.6 Source water collection, injection, and disposal – wells are off lease

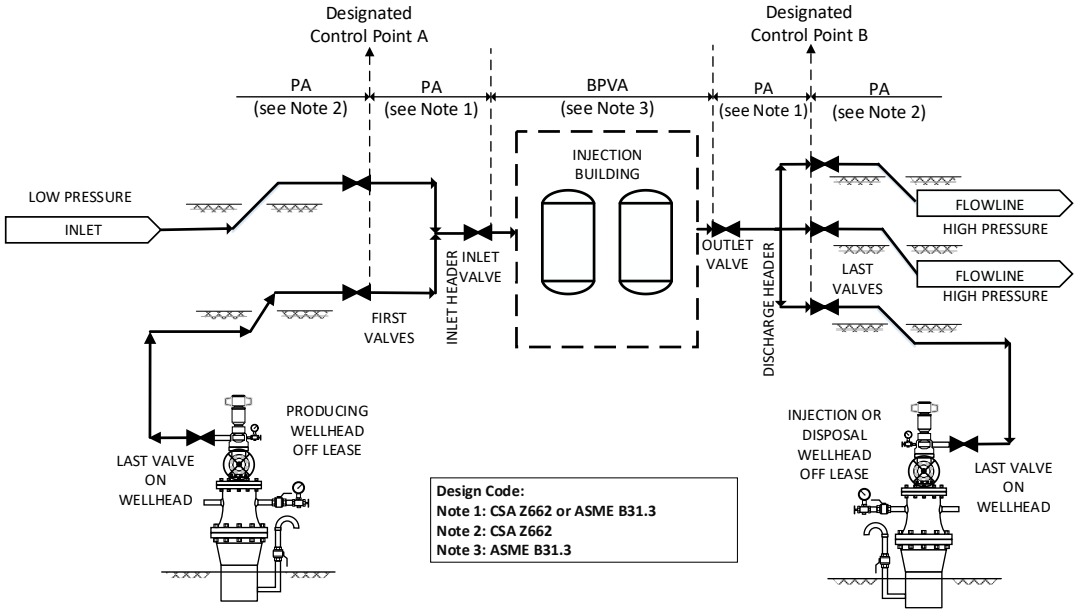

Licensing Requirements:	Pipeline from off lease well to designated control point A (first lease valves) at the inlet header upstream of injection facility requires a flowline licence. The produced water pipeline entering the injection facility up to designated control point A at the lease valve on the inlet header upstream of injection facility requires a flowline licence. For a disposal pipeline (flowline), the pipeline from control point B (the last lease valve) downstream of the injection facility to the lease block valve on the disposal well lease (or wellhead) is covered under a flowline licence.
Design Jurisdiction (Design Review and Acceptance):	**ER:** Pipeline entering the injection facility up to designated control point A at the lease valve on the inlet header upstream of the injection facility. **TSASK:** Pressure vessels and all associated pressure piping. **ER:** Pipeline(s) leaving from designated control point B at the last lease valve on the discharge header.
Design Code or Requirements:	**CSA Z662:** Pipeline entering the injection facility up to designated control point A at the first lease valve on the inlet header upstream of the injection facility. **CSA Z662 or ASME B31.3:** Inlet header piping from designated control point A (first lease valves) to the inlet valve upstream of injection facility. **CSA B51:** Pressure vessels and all associated pressure piping must meet the requirements of CSA B51. CSA B51 refers to ASME B31.3 for piping design. **CSA Z662 or ASME B31.3:** Discharge header piping from the outlet valve downstream of injection facility to last lease valve(s). **CSA Z662:** Pipeline(s) leaving from designated control point B at the last lease valve on the discharge header.
Comments:	If any vessels or piping is associated with expansible fluids, these facilities must be designed to CSA B51 and ASME B31.3.

3.7 Oil/gas satellite with field header to group pipelines

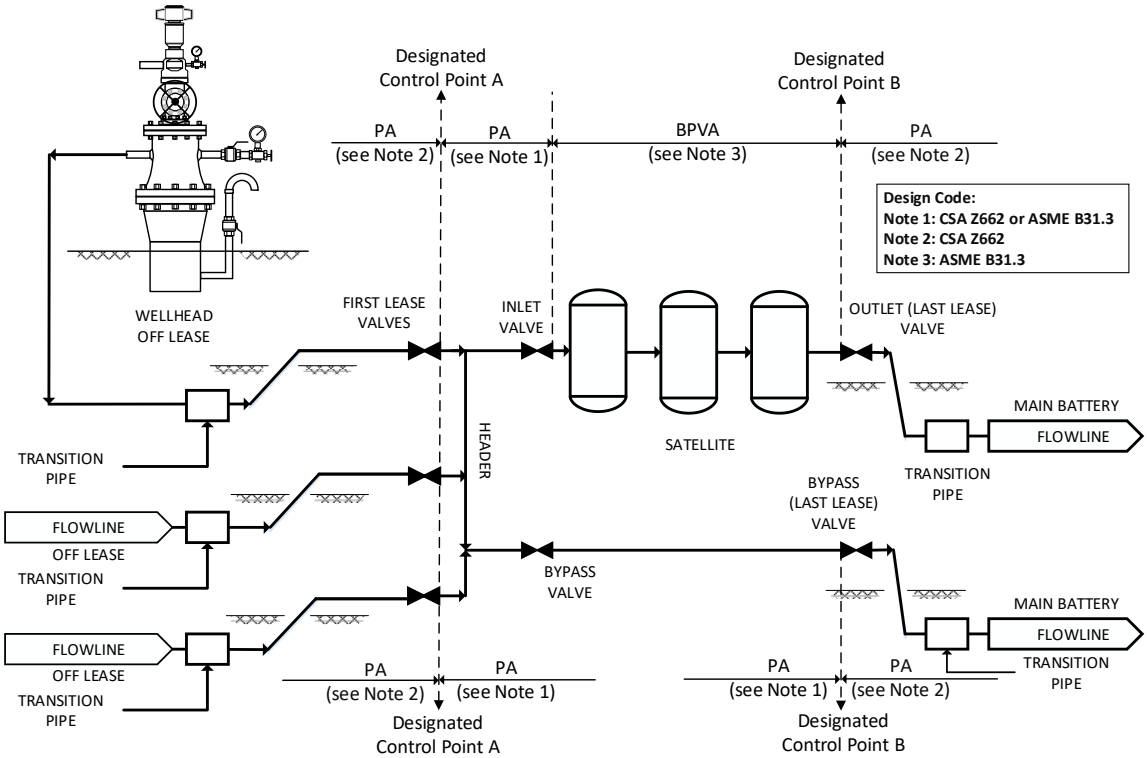

Licensing Requirements:	Pipeline entering the satellite up to designated control point A at the first lease valve(s) on the header upstream of the satellite requires a pipeline licence. Scenarios, where there is only a piping junction and no vessels, are covered under a flowline licence. Pipeline(s) leaving designated control point B at the last lease valve require a flowline licence.
Design Jurisdiction (Design Review and Acceptance):	**ER:** Pipeline(s) entering the satellite up to designated control point A at the first lease valve(s) on the header upstream of the satellite. **TSASK:** Pressure vessels and all associated pressure piping. **ER:** Pipeline(s) leaving designated control point B at the last lease valve. **ER:** If no equipment applicable to *The Boiler and Pressure Vessel Act* is present, all piping will be designed and constructed to CSA Z662 standards.
Design Code or Requirements:	**CSA Z662:** Pipeline(s) entering the satellite up to control point A at the first lease valve(s) on the header upstream of the satellite. **CSA Z662 or ASME B31.3:** Inlet header piping from control point A (first lease valves) to the inlet valve upstream of satellite facility. **CSA B51:** Pressure vessels and all associated pressure piping must meet the requirements of CSA B51. CSA B51 refers to ASME B31.3 for piping design. **CSA Z662 or ASME B31.3:** Any bypass piping from the first lease valve through to the last lease valve. **CSA Z662:** Pipeline(s) leaving designated control point B at the last lease valve.

3.8 Oil battery facility

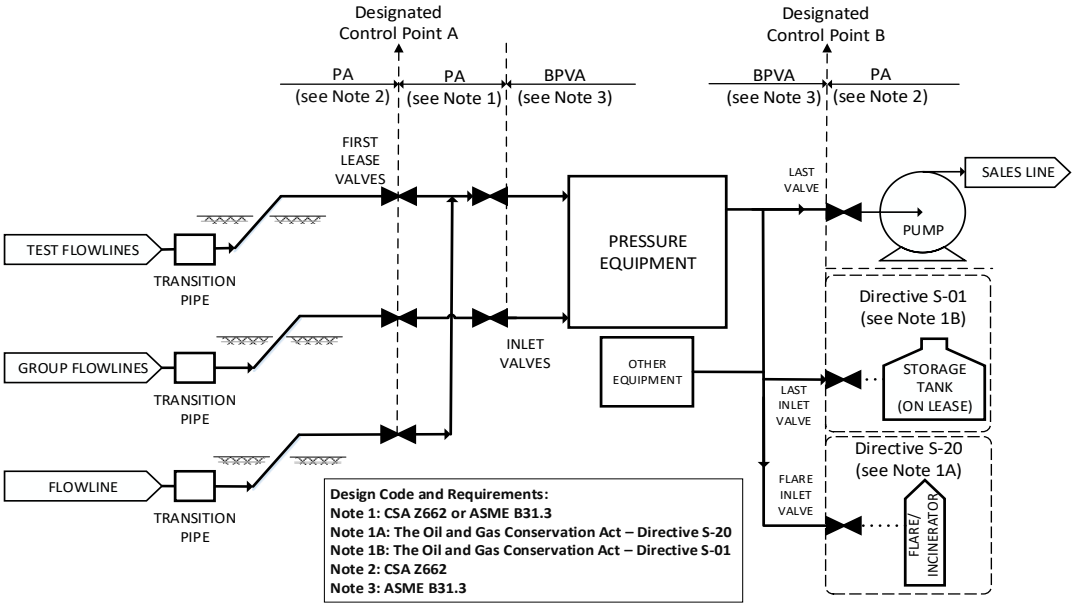

Licensing Requirements:	Pipeline entering the battery up to designated control point A at the inlet valve on the header upstream of the battery requires a flowline licence. Scenarios, where there is only a piping junction and no vessels, are covered under a flowline licence. Pipeline leaving designated control point B requires a pipeline licence.
Design Jurisdiction (Design Review and Acceptance):	**ER:** Pipeline entering the battery up to designated control point A at the inlet valve on the header upstream of the battery. **TSASK:** Pressure vessels and all associated piping through to the last inlet valve or last valve on lease. **ER:** Pipeline leaving designated control point B at the last lease valve.
Design Code or Requirements:	**CSA Z662:** Pipeline entering the battery up to designated control point A at the inlet valve on the header upstream of the battery. **CSA Z662 or ASME B31.3:** Inlet header piping from designated control point A at the first lease valves to the inlet valve(s) upstream of battery. **CSA B51:** Pressure vessels and all associated pressure piping must meet the requirements of CSA B51 through to the last valve on lease or inlet valve on a storage tank or flare/incinerator. CSA B51 refers to ASME B31.3 for piping design. **CSA Z662:** Pipeline leaving designated control point B at the last lease valve.
Comments:	It is also possible for the sales pump to be a part of the battery design, in which case the pump could be designed using ASME B31.3. Storage tank and flare/incinerator design requirements must be in accordance with Directive S-01 and Directive S-20, respectively. “Other Equipment” may include equipment such as pumps, compressors, vapour recovery units, etc.

3.9 Heavy oil/in situ steam flood facility

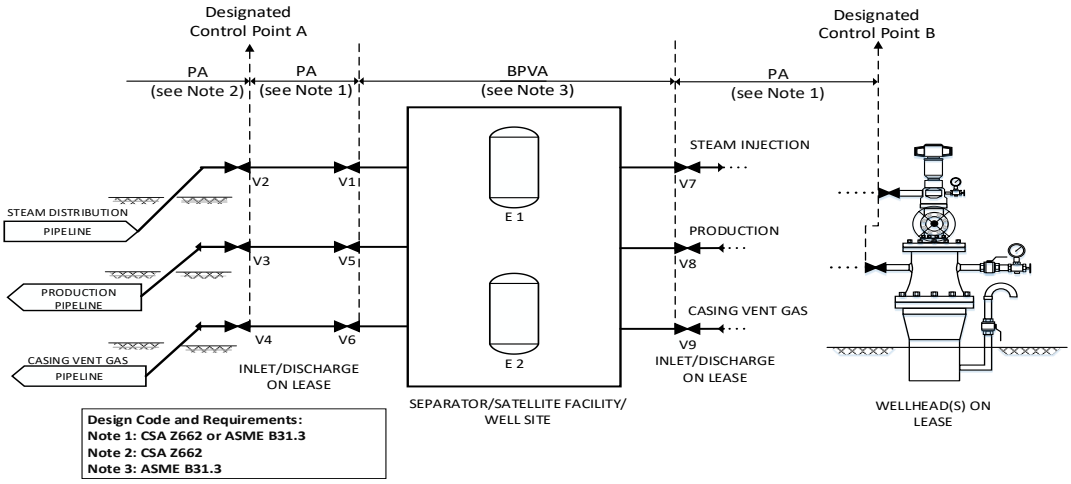

Licensing Requirements:	The steam distribution pipeline leaving an off lease steam generation facility up to designated control point A at the first lease valve on the well site pad requires a flowline licence. Production pipelines and casing vent gas pipelines leaving designated control point A require a flowline licence. Scenarios, where there is only piping and no vessels, are covered under a flowline licence.
Design Jurisdiction (Design Review and Acceptance):	**ER:** Steam distribution pipeline leaving an off lease steam generation facility up to designated control point A at the first lease valve on the well site pad. **ER:** Production and casing vent gas pipelines leaving designated control point A at the lease block valves on the well site pad. **TSASK:** Pressure vessels and associated pressure piping, including the steam distribution, production, and casing vent gas piping between the inlet and discharge valves on the separator.
Design Code or Requirements:	**CSA Z662, Clause 14 or Annex I:** Pipeline leaving the steam generation facility to the well site pad. **CSA Z662:** Production and casing vent gas pipelines leaving the well site pad. **CSA B51:** Pressure vessels and all associated pressure piping must meet the requirements of CSA B51. **CSA Z662 or ASME B31.3:** For steam distribution piping from the discharge header of the well site pad to the wellhead, the applicable design code depends on whether the piping leaves the lease or not. (On lease = B31.3 or CSA Z662, Off lease = CSA Z662) **CSA Z662 or ASME B31.3:** Production piping and casing vent gas piping from the wellhead to the inlet header in the satellite building. **CSA Z662 or ASME B31.3:** Cases where there are no pressure vessels and only piping.
Comments:	For cases with common or shared steam injection and production piping, the piping must meet CSA Z662, Clause 14, standards.

3.10 Compressor Station

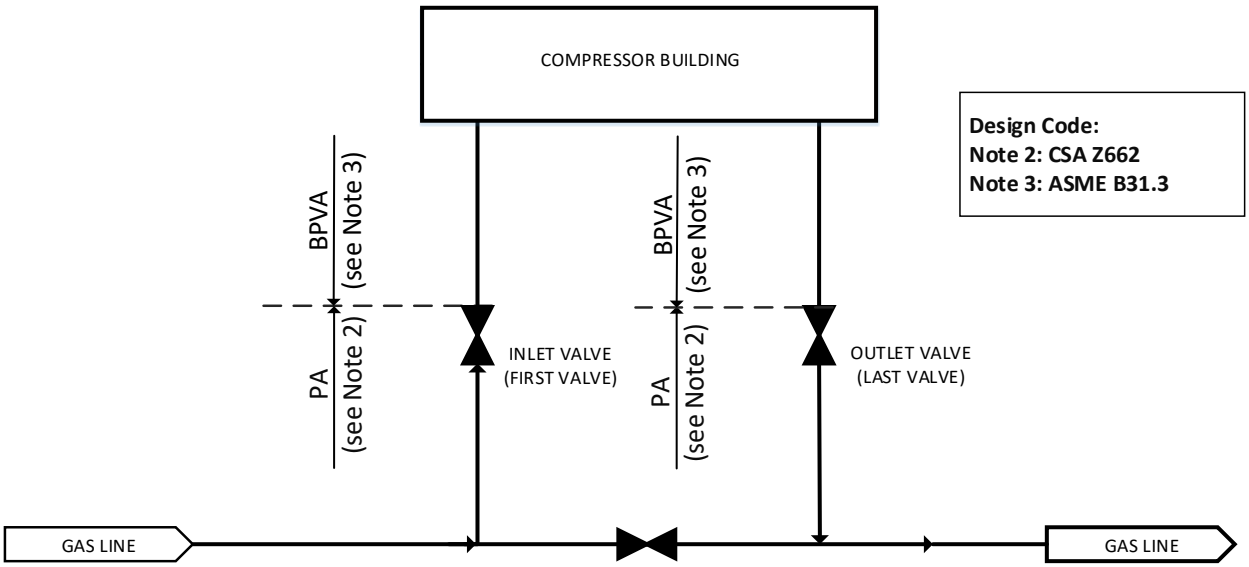

Licensing Requirements:	Pipeline entering the compressor station lease to the inlet or first valve on the manifold upstream of the compressor station is covered under a flowline licence. For a pipeline other than a flowline, piping and equipment from the inlet valve on the manifold upstream of the compressor through to the last valve on the compressor station is covered under a pipeline licence. The pipeline leaving the lease boundary is covered under a pipeline licence.
Design Jurisdiction (Design Review and Acceptance):	**ER:** Pipeline entering the compressor station to the inlet or first valve on the manifold upstream of the compressor station **TSASK:** Separators, vessels, and all associated pressure piping, including interconnecting piping. **ER:** Pipeline leaving the lease boundary.
Design Code or Requirements:	**CSA Z662:** Pipeline entering the compressor station to the inlet or first valve on the manifold upstream of the compressor station **CSA B51:** Separators, vessels, and all associated pressure piping, including interconnecting piping, must meet the requirements of CSA B51 through to the last valve on lease. CSA B51 refers to ASME B31.3 for piping design. **CSA Z662:** Pipeline leaving the lease boundary from the lease block valve.
Comments:	Gas compressor facilities that are part of production operations of gas wells or groups of gas wells that do not have a combined power rating equal or greater than 186.5 kW (250 hp) do not require a facility license in accordance with Directive PNG001. CSA Z662 permits the use of ASME B31.3 for compressor station piping. If no vessels or equipment meeting the definitions of *the Boiler and Pressure Vessel Act* exist in the compressor station, it may be possible to use CSA Z662 design throughout.

3.11 Pump Station

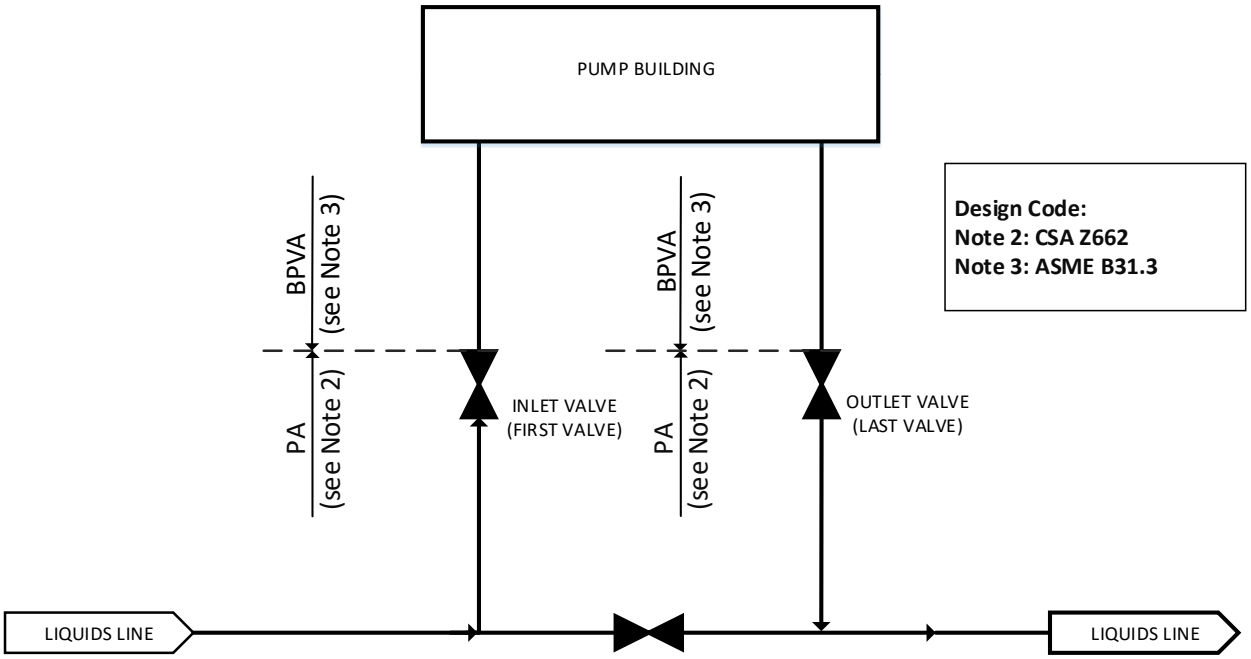

Licensing Requirements:	Pipeline entering the pump station lease to the first inlet block valve upstream of the pump station is covered under a pipeline licence. For a pipeline other than a flowline, piping and equipment from the inlet isolation valve upstream of the pump station through to the last valve on lease is covered under a pipeline licence. The pipeline leaving the lease boundary is covered under a pipeline licence.
Design Jurisdiction (Design Review and Acceptance):	**ER:** Pipeline entering the pump station to the block valve upstream of pump station. **TSASK:** Separators, vessels, and all associated pressure piping, including interconnecting piping. **ER:** Pipeline leaving the lease boundary.
Design Code or Requirements:	**CSA Z662:** Pipeline entering the pump station to the inlet or first valve on the manifold upstream of the pump station. **CSA B51:** Separators, vessels, and all associated pressure piping, including interconnecting piping, must meet the requirements of CSA B51 through to the last valve on lease. CSA B51 refers to ASME B31.3 for piping design. **CSA Z662:** Pipeline leaving the lease boundary from the lease block valve.
Comments:	CSA Z662 permits the use of ASME B31.3 for pump station piping. If no vessels or equipment meeting the definitions of *the Boiler and Pressure Vessel Act* exist in the pump station, it may be possible to use CSA Z662 design throughout.

3.12 Pig barrel design/jurisdiction

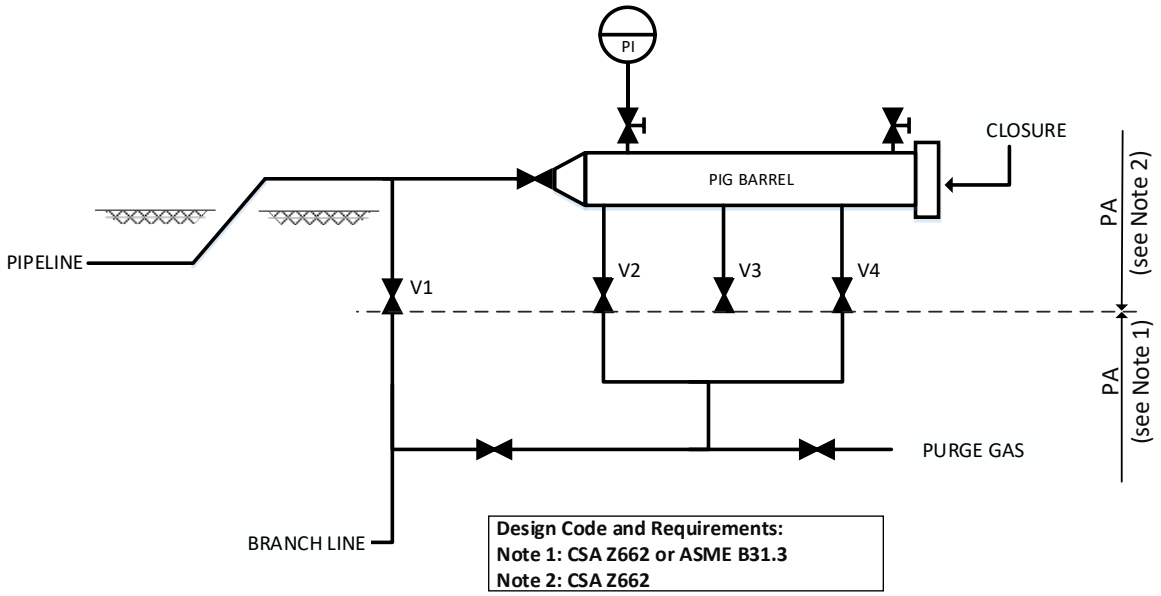

Licensing Requirements:	Pipeline leaving the lease boundary, including the pig barrel and valves V1, V2, V3 and V4 are covered under a pipeline or flowline licence.
Design Jurisdiction (Design Review and Acceptance):	**ER:** Pipeline, pig barrel, and closure.
Design Code or Requirements:	The piping from the isolation valves, shown as "branch line" and "purge gas", is covered under *The Oil and Gas Conservation Act*. However, the design code may change depending on the location of the pig barrel. For example: **CSA Z662 or ASME B31.3:** Within well site lease from wellhead to the lease block valve. **CSA Z662:** Pipeline junctions. **CSA Z662, Clause 4.3.13.1**, requires closure to be ASME S.8, Division 1.
Comments:	Although CSA Z662 allows the barrel to be designed and welded to ASM B31.3, additional requirements are specified for sour service pipeline applications (CSA Z662, Clauses 7.2 and 16.6). For piping arrangements where there may be an additional valve(s) before the pig barrel, an exception to the "first valve on lease" rule is warranted, as the pig barrel is considered to be part of the pipeline.

Appendix 4: Temporary Pipeline

Any person who intends to install a temporary pipeline shall obtain approval from the Field Services Branch of the Energy Regulation Division, ER, where the pipeline is located, prior to the installation.

Temporary pipelines must have:

- a form of pressure protection if there is any possibility of a pressure increase above the maximum operating pressure due to an increase in ambient air temperature or solar heating;
- a system to allow for adequate expansion or contraction due to temperature changes;
- temperature monitoring equipment if the pipeline material has temperature limitations;
- suitable restraints to adequately control any movement; and
- any other safety or operational systems the minister considers appropriate.

Temporary pipelines must be buried at all road crossings and shall have warning signs installed at the entry and exit locations of each crossing.

Additional precautions must be undertaken, including adding warning signs or other warnings to indicate the presence of a surface line, when:

- equipment or people may be working in proximity to the pipeline;
- any vehicular traffic may endanger the pipeline;
- any other conditions that may obscure or endanger the pipeline.